NASA TECHNICAL NOTE

NASA TN D-3205

NASA TN D-3205

DISTRIBUTION STATEMENT A
Approved for public release;
Distribution Unlimited

INVESTIGATION OF THIN FILMS AS FLOATING LINERS FOR FIBER-GLASS CRYOGENIC PROPELLANT TANKS

by Robert W. Frischmuth, Jr

Lewis Research Center

Cleveland, Ohio

19960628 073

DTIC QUALITY INSPECTED 1

PLASTEC

NATIONAL AERONAUTICS AND SPACE ADMINISTRATION • WASHINGTON, D. C. • JANUARY 1966

DEPARTMENT OF DEFENSE
PLASTICS TECHNICAL EVALUATION CENTER
PICATINNY ARSENAL, DOVER, N. J.

DISCLAIMER NOTICE

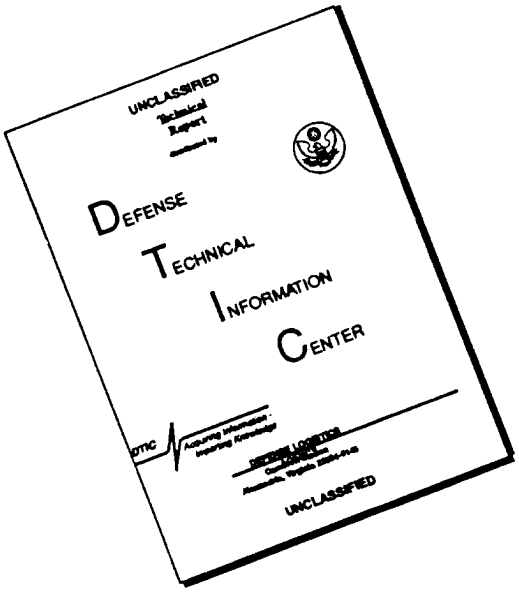

THIS DOCUMENT IS BEST QUALITY AVAILABLE. THE COPY FURNISHED TO DTIC CONTAINED A SIGNIFICANT NUMBER OF PAGES WHICH DO NOT REPRODUCE LEGIBLY.

NASA TN D-3205

INVESTIGATION OF THIN FILMS AS FLOATING LINERS FOR FIBER-GLASS CRYOGENIC PROPELLANT TANKS

By Robert W. Frischmuth, Jr.

Lewis Research Center
Cleveland, Ohio

NATIONAL AERONAUTICS AND SPACE ADMINISTRATION

For sale by the Clearinghouse for Federal Scientific and Technical Information
Springfield, Virginia 22151 – Price $1.00

INVESTIGATION OF THIN FILMS AS FLOATING LINERS FOR FIBER-GLASS CRYOGENIC PROPELLANT TANKS

by Robert W. Frischmuth, Jr.

Lewis Research Center

SUMMARY

The use of filament-wound fiber-glass liquid-hydrogen propellant tank structures should result in a considerable weight savings providing that a suitable internal liner can be developed. This report investigates the use of free-floating liners (not bonded to the inner surface of the filament-wound shell). A theoretical analysis and experimental study on laminated Mylar, Teflon, and aluminum-Mylar liners showed that upon tank pressurization at liquid-hydrogen temperatures, plastic liners fabricated to the internal dimensions of the filament-wound structure would fail in tension before the burst pressure of the filament-wound shell was approached. The study showed that the available liner strain could be increased by making the liner oversized and allowing it to randomly wrinkle within the shell.

INTRODUCTION

It is known that the use of hydrogen as the propellant in either a chemical or nuclear rocket results in a significantly higher specific impulse than any other propellant. Unfortunately, when in a liquid state, hydrogen has some undesirable properties which make storage in space difficult and thereby seriously limits its use as a propellant. Since the liquid has a very low density (4.4 lb/ft^3), larger and hence heavier propellant tanks are required. This increases the need for a lightweight tank structure.

The use of fiber-glass reinforced plastics as a tank structural material has a distinct weight advantage over conventional tank materials. In fact, filament-wound motor cases for solid-fuel rockets have been used successfully with considerable savings in weight.

Although fiber-glass tanks are lightweight, they have a serious limitation. Because of their nonhomogeneous nature, filament-wound tanks leak. Therefore an internal sealer or liner is required. For conventional room-temperature applications an elastomeric material such as natural rubber, silicone rubber, or neoprene is used since these materials are capable of high elastic strain; the ultimate strain of glass fiber is about 5 percent, reference 1. At liquid-hydrogen temperatures (normal boiling point, -423° F) the ultimate strain of glass fiber remains high (about 5 percent), but the ultimate strain of conventional liners and sealers is greatly reduced. Also, in general the thermal contraction of most materials (especially elastomers) is much greater than that of fiber glass. The development, then, of a suitable sealer or liner is one of the major problems associated with the use of fiber glass as a material for liquid-hydrogen tanks.

As part of a general program on liquid-hydrogen tankage problems the Lewis Research Center is conducting a preliminary investigation to evaluate various methods of lining a fiber-glass tank. These investigations are described in references 2 to 6. Basically there are two general liner - fiber-glass shell configurations (both of which are being studied). One is called a bonded liner. With this configuration the liner is an integral part of the tank wall. The other is called an unbonded or floating liner. Here the liner is separate from the fiber-glass shell. The bonded liner is easy to fabricate since the liner can be assembled on the mandrel and the fiber-glass shell wound directly over the liner. However, it has the disadvantage of possible shell buckling due to thermal stresses induced by unequal thermal contraction rates of the liner and fiber-glass shell (ref. 3). Also high local liner strains are possible due to nonuniform distribution of filaments in the shell wall. On the other hand, with the floating liner there is no buckling or local strain problems. However, floating liners do tend to fold or wrinkle. A floating liner, then, must be flexible at liquid-hydrogen temperature, and have the capability of wrinkling and unwrinkling without developing pin-hole leaks.

The object of the research reported herein was to evaluate the concept of the floating liner and develop a method of liner fabrication. Liners were made of laminated Teflon, Mylar, aluminum-Teflon, and aluminum-Mylar, fabricated by Viron Division of Geophysics Corporation of America and the Dielectrix Corporation. The liners were tested in 24-inch long by 18-inch diameter filament-wound fiber-glass shells obtained from B. F. Goodrich Corporation and Lamtex Corporation. Experimental and theoretical results along with the method of design and fabrication are presented in this report.

SYMBOLS

E modulus of elasticity, lb/in.^{2}

L leak rate, std cm^3/sec

ℓ length of tank, in.

P pressure, lb/in.^{2}

S thermal contraction from room temperature to a lower temperature, in./in.

t thickness

X an initial liner or shell dimension, in.

α filament winding angle, degrees (see fig. 16)

β fraction oversize, $\frac{X_L - X_S}{X_S}$

ϵ strain, in./in.

$\epsilon(P)$ shell strain as function of pressure, in./in.

ϵ^T effective thermal strain of liner, $S_L - S_S$, in./in.

ν Poisson's ratio of liner material

σ stress, lb/in.^{2}

Subscripts:

g glass fiber only

L liner

max maximum

S fiber-glass shell

ult ultimate uniaxial for the liner

z axial direction (see fig. 16)

θ circumferential direction (see fig. 16)

LINER DESIGN CONSIDERATIONS

A criterion for liner integrity (derived in the appendix) is:

$$\epsilon(P) < (1 - \nu)\epsilon_{ult} - (S_L - S_S) \tag{1}$$

This expression assumes Hooke's law to hold to the ultimate, a liner of negligible thick-

TABLE I. - ULTIMATE STRAIN AT -423° F AND THERMAL CONTRACTION FOR SOME MATERIALS

Materials	Ultimate tensile strain, ϵ_{ult}, in./in.	Overall thermal contraction 75° to -423° F, S_L, in./in.	Reference	Maximum allowable tank strain, $\epsilon(P)$, in./in. (calculated) (b)
Fiberglass resin composite	[a]2.7×10^{-2}	1.8×10^{-3}	3	--------
Mylar "A" film	.82	3.86	6	0.41×10^{-2}
"H" Film	1.69	5.26	6	.94
Polyurethane	2.20	16.31	6	.20
Teflon FEP	2.0	22.0	13	-.02
2024 Aluminum	20.0	4.2	6, 12	c
304 Stainless steel	30.0	3.0	12, 14	c

[a]This number should probably be higher since all the test specimens failed in the jaws of the apparatus.

[b]See eq. (1). In this calculation ν was assumed to be 0.25 (ref. 9), a theoretical value for an ideal isotropic material.

[c]Maximum $\epsilon(P)$ not calculated since these materials strain mainly by yielding.

ness in comparison to the fiber-glass shell, the dimensions of the liner (before cooling) to be the same as the inside dimensions of the fiber-glass shell, and that the fiber-glass shell is of balanced design; that is, all the filaments carry the same load upon pressurization (the more general case of an unbalanced shell design is covered in the appendix).

The severity of the liner problem is emphasized by the data shown in table I. Shown are some typical material properties for fiber-glass-resin composites and proposed liner materials. The column on the right is the quantity $\left[(1 - \nu)\epsilon_{ult} - (S_L - S_S)\right]$, which corresponds to the value of tank strain $\epsilon(P)$ at which the liner will fail. The best of the shown plastics can only allow the fiber-glass shell to develop about one-third of its ultimate tensile strain. For a Teflon liner the maximum tank strain is negative. This indicates that just a small amount of pressure (that which is necessary to expand the liner out to the dimensions of the inside of the fiber-glass shell) will rupture the liner. Thus, Teflon is unsatisfactory.

Some metals have high ultimate strains at -423° F (see table I). It would seem conceivable that a liner could be made out of a thin metal foil or a laminate of foils. The

problem is, however, that the high metal strain is mostly inelastic. That is, the metal permanently stretches or yields. Upon tank pressurization, then, the proposed metal liner yields. When the pressure is released, the liner, which is now oversized, tends to fold and wrinkle. Metal foils in general have a poor resistance to wrinkling and will develop pin hole leaks.

It was believed, on the other hand, that some plastics in the form of thin films would have the ability to wrinkle somewhat without developing leaks. A liner of such a plastic could be fabricated to dimensions larger than the internal dimensions of the fiber-glass shell. This would effectively increase the extensibility of the liner and allow a closer approach to the ultimate tensile strain of the fiber-glass shell. Therefore the approach to the problem used in this report was to make the initial liner dimensions slightly oversized. The criterion for liner integrity, inequality (1), can then be modified (eq. (A14), appendix) as follows:

$$\epsilon(P) < (1 - \nu)\epsilon_{ult} - (S_L - S_S) + \beta \tag{2}$$

where β is the fraction the initial liner dimensions are oversized. A $\beta > 0$ implies that a free-floating liner must be wrinkled before cooling or tank pressurization.

DESCRIPTION OF TANK

The tankage system used in this investigation consisted of a filament-wound fiber-glass structural outer shell and a separate liner that could be inserted or removed through the end fitting of the shell (see fig. 1). At the time when the liners were designed and fabricated, the severity of the liner problem as defined in the preceding section was not fully recognized because property data of the type shown in table I was not available for all candidate liners and fiber-glass-resin materials. As a result two of the five test liners were made of Teflon. The other liners were made from Mylar and Mylar-aluminum laminates. Also, the concept of an oversized liner had not evolved either, so liners were fabricated to the exact internal dimensions of the filament-wound shells ($\beta = 0$). In the latter portion of the liner test program the oversized liner concept was evaluated by first lining the inside of the filament-wound shell with a 1/16-inch (uncompressed)-thick felt pad before inserting the liner. This reduced the initial shell dimension thus giving a $\beta > 0$. This felt pad also helped to prevent the liner from being punctured by the possibly rough inner surface of the shell.

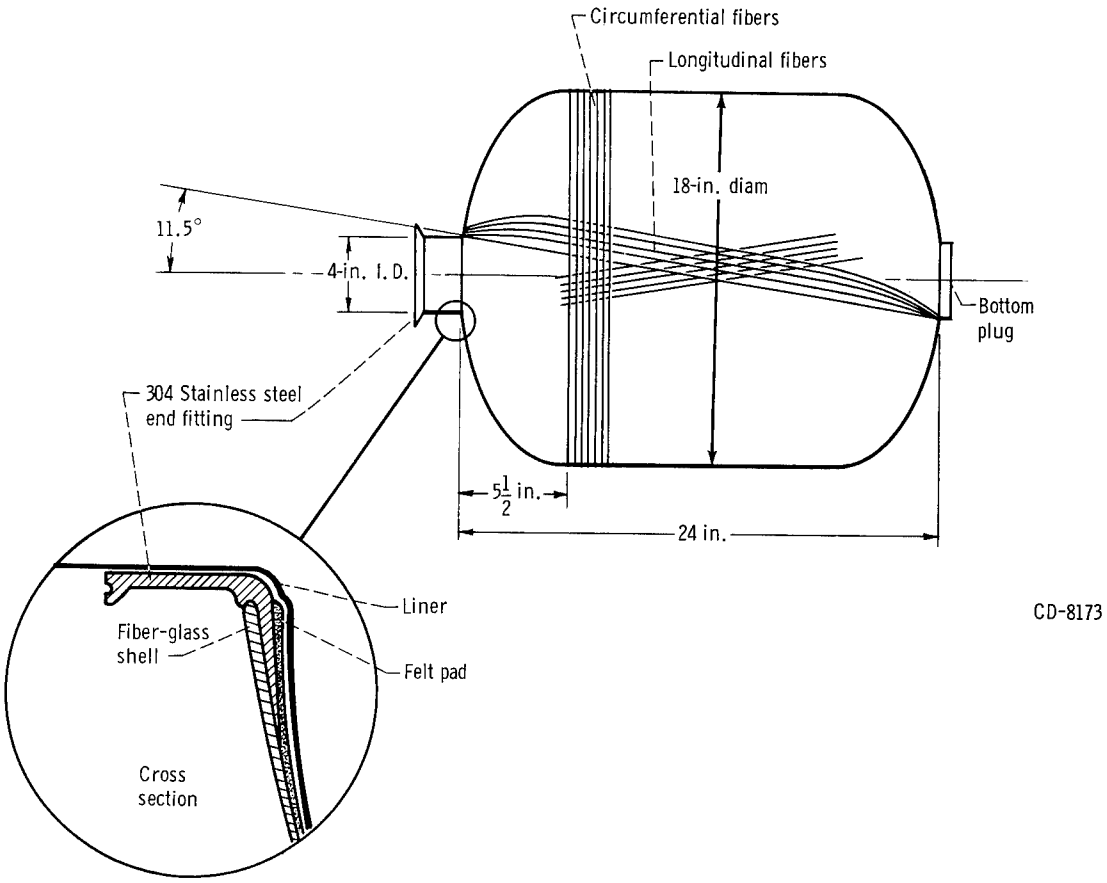

Figure 1. - Design of filament-wound tank.

Fiber-glass Shell

Three 18-inch-diameter by 24-inch-long cylindrical shells with dome-shaped ends were procured for this investigation. Although the tanks were to be used for cryogenic fluids, the fiber-glass composite shells were not specifically designed for low temperatures. All three shells were made with E-HTS Fiberglas (ref. 1) and a modified epoxy resin. The dimensions of the shells were similar; however, two slightly different winding patterns were used. For the sake of simplicity, only the shell design used in conjunction with the Mylar liners will be discussed in detail.

A conventional winding pattern consisting of a longitudinal and circumferential wrap was used (fig. 1). The longitudinal wrap was of a standard balanced-in-plane design, reference 7, with a winding angle (angle between a fiber-glass strand and the longitudinal axis of the tank) of 11.5°. The contour of the ends of the shell was of the isotensoid (refs. 1 and 7) type consistent with the balanced-in-plane wrap.

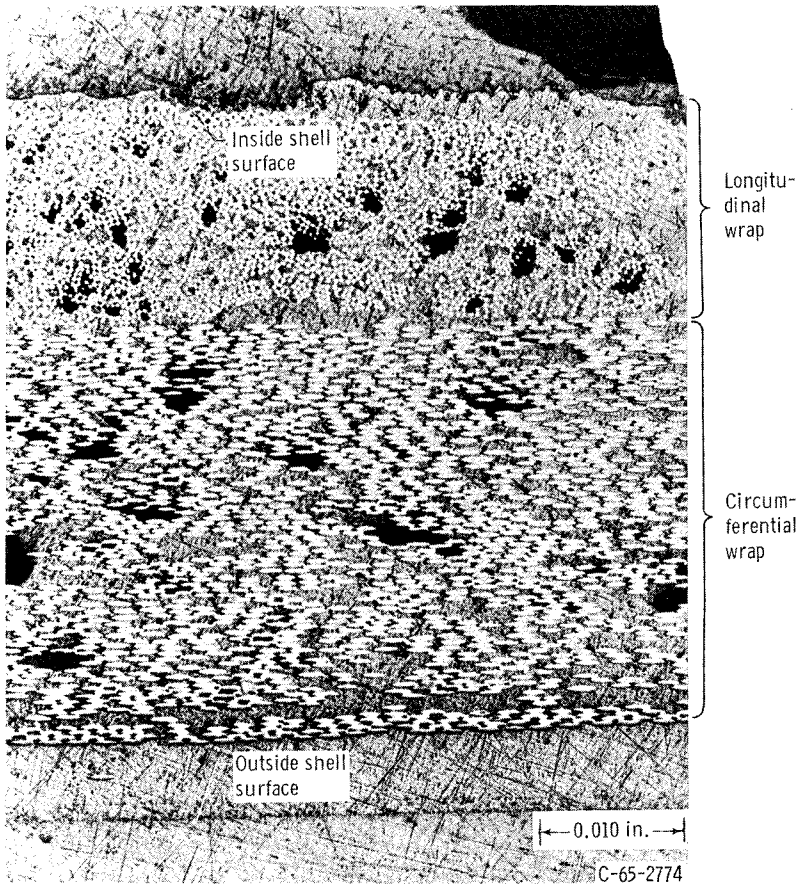

Figure 2. - Photomicrograph of filament-wound shell cross section.

Figure 2 is a photomicrograph of a typical cross section in the cylindrical portion of the shell. The cross section was taken perpendicular to the half of the longitudinal wrap that runs at a winding angle of $+11.5^{\circ}$ (the other half of the longitudinal wrap runs at -11.5°). The white dots in the top of figure 2 are the longitudinal filaments. Although half of the longitudinal wrap was cut at an angle of 67°, the cross sections of these filaments do not appear to be ellipses since their eccentricity is small. The ellipses in the lower part of figure 2 are circumferential filaments (cut at an angle of 11.5°). The black areas are voids. From photomicrographs such as figure 2 the following can be calculated:

(1) Strand density of longitudinal wrap, 392 strands/in.

(2) Strand density of circumferential wrap, 799 strands/in.

(3) Glass content by volume, 52.7 percent

(4) Thickness of shell, 0.047 in.

One strand is a bundle of 204 individual filaments and has a cross-sectional area of glass of 2.08×10^{-5} square inch.

Knowing the strand densities, the strength of the fiber-glass shell can be calculated.

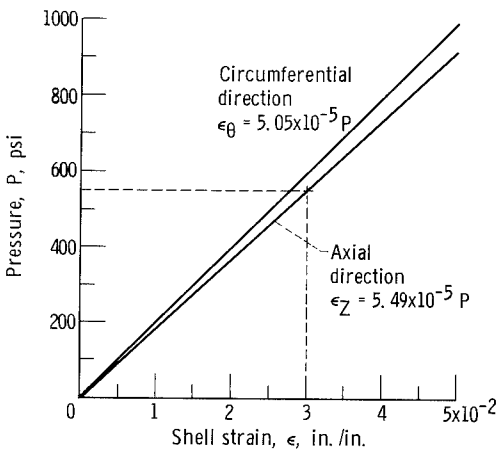

Figure 3. - Calculated shell strain as function of pressure at room temperature.

Using the method outlined in reference 3, the relation between shell strain and pressure $\epsilon(P)$ can be calculated and is shown in figure 3. Now, the ultimate strain of "E" glass is about 5 percent (ref. 1). However, when fiber glass is used in a filament-wound vessel, the ultimate strain of the glass is reduced due to imperfect packing of the longitudinal fibers as they cross over each other in the vessel domes, and imperfections such as variation in resin content, broken fibers due to handling, nonuniform winding tension, and nonuniform strand distribution. A realistic ultimate shell strain is about 3 percent (ref. 1) which corresponds on figure 3 to a burst pressure of about 550 pounds per square inch. The reason the shell was built this strongly is that there is a practical limit on how thin a fiber-glass shell can be made. Consider the area of the dome at the transition to the cylindrical portion of the tank. Here the surface is not covered by circumferential strands and consequently the wall is thinner here than anywhere on the shell. The dome wall gets thicker as the axis of the vessel is approached due to overlapping of the longitudinal strands. The minimum strand density that can be used in this thin area to adequately support the liner is determined by one layer of adjacent strands. Assuming hexagonal close packing of the individual filaments within the glass strands, the minimum strand density of the type of strand used in this tank is about 370 strands per inch for the longitudinal wrap.

Liners

Table II describes the materials used in the liners fabricated for this investigation. Most of the materials are of laminated construction because thin plastic films often have occasional small holes. Laminating several sheets together reduces the possibility of a straight-through hole. Also, the laminated material is more flexible at room temperature and hence easier to work with.

Two different methods of liner fabrication were employed. Liners 1 and 2 were made by laying up dispersions of Teflon on aluminum mandrels sized to the inside dimensions of the fiber-glass shell. The dispersed Teflon was then fused to produce a seamless liner. Later the aluminum mandrel was dissolved out. This produced a liner that fitted the fiber-glass shell with high precision. It is unfortunate that Teflon is incompatible with fiber glass at -423° F. However, this is still a good fabrication technique for thermoplastic resins. Liner 1 had a layer of aluminum bonded to the outside

TABLE II. - LINER MATERIALS

Liner	Number of laminations	Material and thickness			Total thickness, mils (a)	Protective 1/16-in. thick felt spacer
		1st Ply	2nd Ply	3rd Ply		
1	3	2-mil Teflon[b]	1-mil Teflon[c]	0.5-mil aluminum	3.5	None
2	1	3-mil Teflon[b]	----------	----------	3	None
3 Dome portion	2	1-mil Mylar	1-mil Mylar	----------	2	On lower dome only
3 Cylindrical portion	3	0.75-mil Mylar	1-mil aluminum	0.75-mil Mylar	2.5	
4	2	0.5-mil Mylar	0.5-mil Mylar	----------	1	Entire surface
5	2	0.5-mil Mylar	0.5-mil Mylar	----------	1	Entire surface

[a]Does not include thickness of adhesive.

[b]Codispersion of TFE and FEP.

[c]FEP.

(table II) to reduce its permeability. There were discontinuities in the aluminum so that it could not be considered a structural part of the liner.

With liners 3 to 5 a different fabrication technique had to be used since Mylar is a thermosetting resin. These liners were made by gluing together pieces cut from commercially available rolled material. The cylindrical portion was made from one sheet and each dome was made from 10 pie-shaped gores. As expected the dome contour of the liner only approximated the contour of the shell, however, the fit was satisfactory.

The seams were butt joints covered with Mylar tape. Two slightly different joint configurations were used. The configuration shown in figure 4(a) was used on liner 3. As shown later in the results, this configuration did not give a reliable leak-tight seal. Therefore, the design was modified as shown in figure 4(b).

The adhesive used in the joints was Dupont 46971. It has been shown that this adhesive has good Mylar-bonding characteristics at -423° F, reference 8. The adhesive in the joints was cured by running a hot iron along the seams.

Liner 3 was made before liners 4 and 5 as a preliminary test. The cylindrical and dome portions of liner 3 were made out of different materials (table II). When this liner

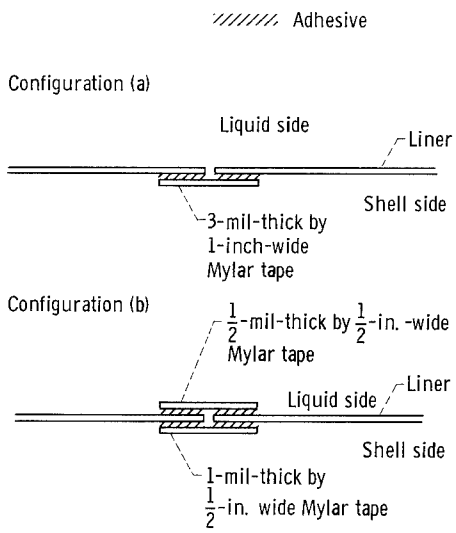

Figure 4. - Adhesive joint configuration for Mylar liners.

was inserted into the fiber-glass shell and the tank pressurized, several small leaks developed in the region of the lower dome due to roughness on the internal shell surface. It was found that a thin felt spacer would prevent the liner from being punctured. Hence, the lower dome of the shell was lined with felt. The felt pad was made from several gores sewn together. The felt was then steamed and fitted into the fiber-glass shell. With liners 4 and 5 the felt padding was extended to cover the entire inner surface of the shell not only to protect the liner but also to evaluate the effect of slightly oversizing the liner. Liners 4 and 5 were made identical to each other. The total thickness of liner 4 or 5 (table II) was about 0.001 inch.

TEST FACILITY AND PROCEDURE

Liquid-Hydrogen Test Facility

Figure 5 shows the facility that was used for the tests with liquid hydrogen. The tank was mounted in a bell jar which had a twofold purpose. First, the vacuum in the bell jar insulated the tank so that it could be kept full of liquid hydrogen for a reasonable length of time. Secondly, the bell jar provided a fixed volume so that the leak rate of the tank could be determined by rate of change of pressure in the bell jar.

In general, one of the major problems encountered when determining leak rate by change of pressure in a control volume is the elimination of leaks from sources other than the object of interest. The problem is further aggravated by cryogenic temperatures. The hardware used in this test was designed so that all low-temperature vacuum seals were vacuum protected. That is, at least a partial vacuum is maintained on both sides of a seal to eliminate the pressure driving force causing the leak. This was accomplished by enclosing the bell jar in a vacuum chamber (see fig. 5). Notice, for example, how the liner is sealed at the top of the neck fitting. If a small leak should occur here, the hydrogen would not leak into the bell jar, but would leak into the outer vacuum chamber which is being continuously pumped upon. The only possible way that anything could leak into the bell jar is through the liner.

The instrumentation (also shown in fig. 5) consisted of:

(1) A pressure transducer of the strain gage type

(2) A capacitance type liquid level probe

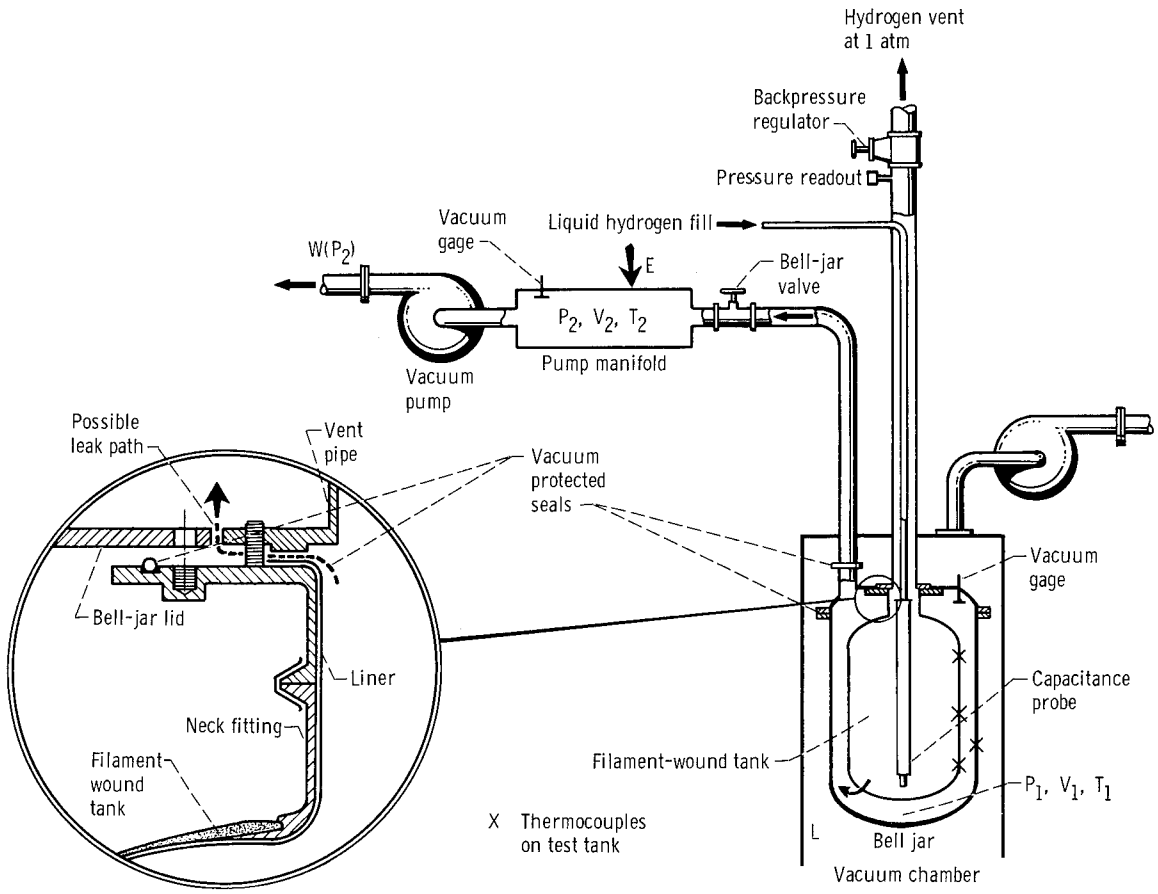

Figure 5. - Liquid hydrogen facility for tank liner tests.

(3) Hot filament type vacuum gages used in the determination of leak rate of the tank

(4) Copper-constantan thermocouples located on the outer surface of the filament-wound shell and bell jar

Test Procedure

The testing of the tank is divided into three steps:

(1) First, the initial leak rate is established, using helium at room temperature in the tank, for the purpose of evaluating the condition of the tank before filling with liquid hydrogen.

(2) The second test consists of thermally cycling the tank at a constant internal pressure of 1 atmosphere. One thermal cycle involves first cooling the tank to -423° F with liquid hydrogen and then warming the tank to room temperature using warm helium. The ability of the liner to withstand repeated thermal stresses is evaluated by examining the leak rate.

(3) The third test consists of pressure cycling the tank after filling with liquid hydrogen and attaining thermal equilibrium. The pressure is increased by the self-pressurization of boiling hydrogen. For each cycle the pressure is increased from atmospheric to an arbitrary level P and then decreased to atmospheric. For each subsequent cycle, P is increased by about 10 pounds per square inch until either the liner fails or the ultimate strain of the fiber-glass shell is approached. Leak rate is used to indicate the condition of the tank.

Method of Determining Leak Rates

For determining small leak rates the bell-jar valve (shown in fig. 5) is kept closed. The leak rate corrected to standard conditions of temperature and pressure, is then given by the simple expression:

$$L = KV_1 \frac{T_s}{T_1} \frac{dP_1}{dt}$$

where P_1, V_1, and T_1 are the pressure, volume, and temperature of the bell jar; t is time; T_s is 460° R; and K is a unit conversion, 1.04×10^{-5}(std cm^3/sec)/(μ ft^3/hr).

For large leak rates, the bell jar must be pumped upon continuously in order to maintain a reasonable vacuum. With the bell-jar valve open, then, the above expression must be modified to:

$$L = KV_1 \frac{T_s}{T_1} \frac{dP_1}{dt} + KV_2 \frac{T_s}{T_2} \frac{dP_2}{dt} + \frac{T_s}{T_2} W(P_2) - E$$

where in addition P_2, V_2, and T_2 are the pressure, volume, and temperature of the pump manifold; $W(P_2)$ is pump rate as a function of P_2; and E is extraneous leaks into the pump manifold (assumed constant).

EXPERIMENTAL RESULTS AND DISCUSSION

Teflon Liners

Before testing the Teflon liners the property data on fiber glass shown in table I

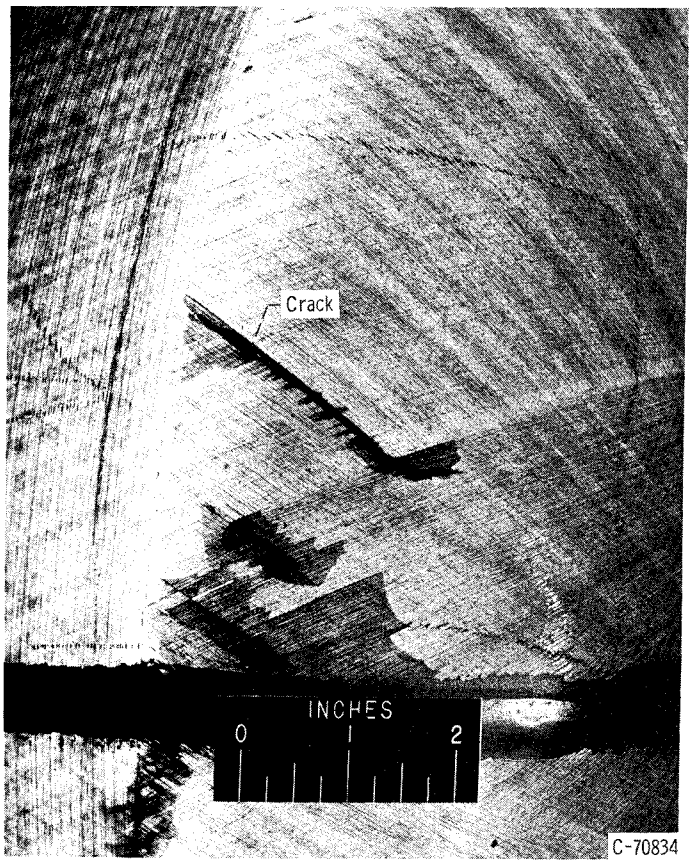

Figure 6. - Crack in fiber-glass shell.

(p. 4) became available and thus Teflon was expected to fail. The liners were tested to confirm the analysis (appendix) and also to gain experience in controlling the apparatus. Since the liners were of the floating configuration, theoretically they should not fail if there were no pressure drop across the tank wall. This condition, however, could not be achieved in this facility since there was a vacuum outside of the tank and the liquid-hydrogen supply was at atmospheric pressure.

Liner 1 (Teflon-aluminum). - The initial leak rate (helium at room temperature and atmospheric pressure in the tank) was about 2 standard cubic centimeters per second. Upon filling with liquid hydrogen the liner failed immediately (along the discontinuities in the aluminum). This fact supports the data and analysis shown previously in table I.

Liner 2 (Teflon). - The initial helium leak rate was about 0.4 standard cubic centimeter per second. An attempt was made to oversize the liner by pressurizing the tankage system at room temperature. Teflon has a tendency to cold flow when stressed for a period of time. As the pressure was slowly increased the liner unexpectedly failed at a tank pressure of only 96 pounds per square inch gage (as shown previously at a tank pressure of 550 psi the shell strain is 3 percent; the ultimate strain of Teflon is over 200 percent at room temperature). Examination of the tank showed a crack (fig. 6) in the upper dome of the fiber-glass shell near the transition to the cylindrical portion (the area of lowest filament density). Although the resin cracked, this cannot be considered a shell failure since there were very few, if any, broken filaments. Figure 7 shows the area of the liner that corresponds to the location of the crack in the shell. It appears that the liner failure was caused by the internal pressure forcing the liner into the crack. This failure led to the use of the felt spacer on succeeding tanks.

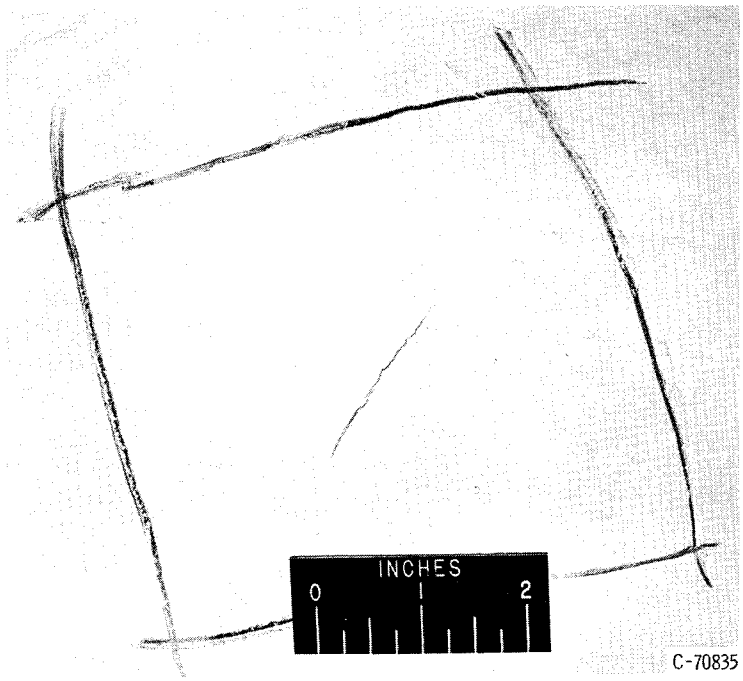

Figure 7. - Failure of liner 2 (Teflon).

Mylar Liners

Liner 3 (Mylar domes, Mylar-aluminum cylindrical portion). - The initial leak rate (helium at 1 atm in the tank) was about 2×10^{-2} standard cubic centimeter per second. As the tank was filled with liquid hydrogen, a leak of large proportions developed. The test was stopped due to the large leak and the liner was removed. Inspection using a helium mass spectrometer leak detector revealed no sizeable leaks. The liner was put back in the shell and tested again. Upon fill with liquid hydrogen the same thing happened. The hydrogen was then transferred out of the tank and the tank allowed to warm up in the test facility. After warming up the leak rate dropped to a very small value. Every time the liner got cold, a leak opened up and when the liner returned to room temperature the leak resealed itself. This was probably due to thermal stresses acting on one of the adhesive joints.

This variable leak made liquid-hydrogen testing at increased pressures difficult since the leak rate at higher pressure was too large for the vacuum equipment to handle. However, the tank pressure was cycled very quickly to 65 pounds per square inch (the instant the pressure reached 65 psi, the pressure was immediately dropped back to 1 atm). After 10 of these pressure spikes the hydrogen was transferred from the tank and the tank allowed to warm up. The helium leak was again found to be a small value, indicating no damage to the liner.

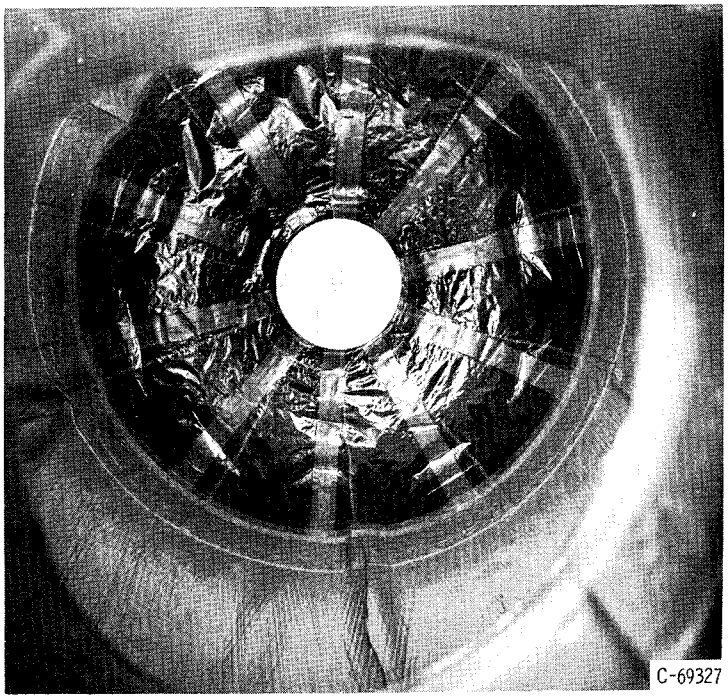

Figure 8. - Liner 3 (Mylar domes, aluminum-Mylar cylindrical section) after testing with liquid hydrogen.

Figure 8 is a photograph taken through the neck fitting of the tank after testing. The lower dome and part of the cylindrical portion is shown. The stitching in the felt (used in the lower dome only) can be seen through the Mylar-Mylar laminate used in the lower dome. In the cylindrical portion an impression of the longitudinal filament-winding pattern can be seen in the Mylar-aluminum-Mylar laminate lining material.

Liner 3 was built to see what materials and fabrication techniques should be used on the remaining liners. The felt pad in the lower dome worked satisfactorily, so it was decided to extend the pad to cover the entire inner surface. The test showed the adhesive joints to be mechanically strong, but unreliable leak-tight seals at -423° F. Therefore the design of the joints was changed to that previously shown in figure 4(b) (p. 10).

The liner 3 test also showed that both liner materials (Mylar laminate and Mylar-aluminum laminate) worked satisfactorily at -423° F for small tank strains. It was decided, however, to use the Mylar-Mylar laminate for liners 4 and 5 for two reasons. The aluminum in the Mylar-aluminum-Mylar laminate caused difficulty when heat curing the adhesive joints. The aluminum tended to conduct the heat away from the immediate area of the joint. Also, the Mylar-Mylar laminate was commercially available at the time in a smaller thickness (total thickness, 1 mil). The thinner the liner, the more flexible it is and hence the greater its ability to wrinkle.

Liner 4 (Mylar laminate). - The initial helium leak rate was 4.7×10^{-2} standard cubic centimeter per second at room temperature and atmospheric pressure. The tank was

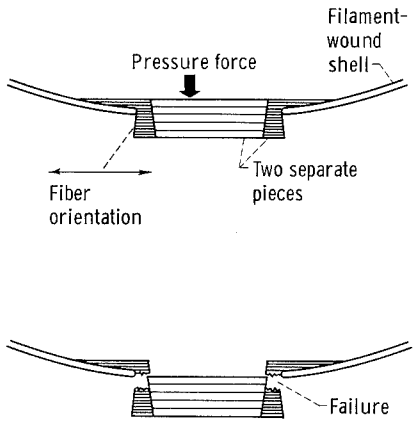

Figure 9. - Cross section of bottom end fitting of fiber-glass shell.

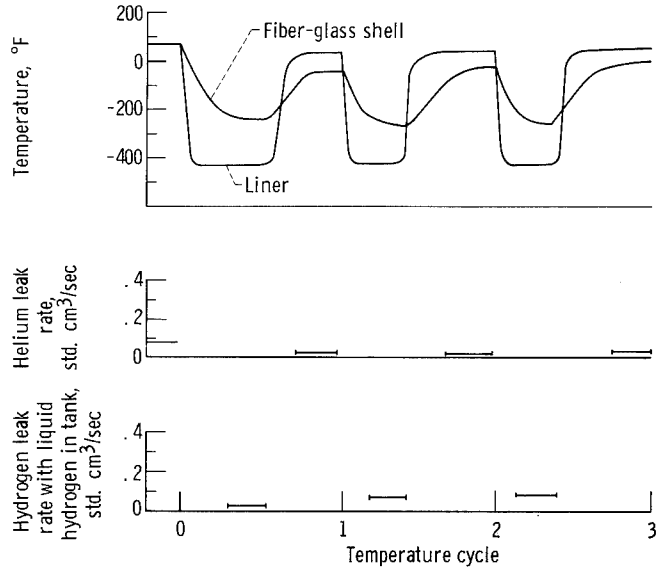

Figure 10. - Temperature cycling liner 5 (Mylar laminate) with liquid hydrogen at a tank pressure of 1 atmosphere.

temperature cycled three times at atmospheric pressure using liquid hydrogen. No increase in helium leak rate was noted. Before pressure cycling at -423° F, it was necessary to check the test apparatus by pressurizing the tank with helium at room temperatures. At about 200 pounds per square inch, the bottom plug blew out of the fiber-glass shell thus ending liner 4. The bottom fitting, made of fiber glass and resin, was made in two parts (fig. 9) to allow for a shaft to support the mandrel during the winding of the shell. The glass fibers were oriented in the wrong direction for carrying a tensile load in the region of the failure.

Liner 5 (Mylar laminate) test results. - The initial helium leak rate was about 7×10^{-2} standard cubic centimeter per second at room temperature and a pressure of 1 atmosphere. The tank was put through three thermal cycles, using liquid hydrogen, without any increase in leak rate (see fig. 10). The temperature of the fiber-glass shell (fig. 10) never approached the temperature of liquid hydrogen (-423° F). At 1 atmosphere tank pressure the fiber-glass shell cooled to a steady-state temperature of -270° F. This was due to the insulating quality of the felt spacer, which was in this case evacuated to approximately the same pressure as the bell jar (average of about 10μ Hg). Thermal conductivity of the evacuated felt spacer was calculated to be 3×10^{-4} Btu per hour per foot per °F. It should be pointed out that this tank could not be tested in the air since air would be cryopumped into the felt. The saturation of the felt with liquid air would not only be dangerous, but would destroy the insulating quality of the felt.

Next the tank was pressure cycled, as shown in figure 11, with liquid hydrogen in the tank. The leak rate, measured after each pressure cycle, was found to be less than 5×10^{-2} standard cubic centimeter per second for the first 10 cycles indicating no damage

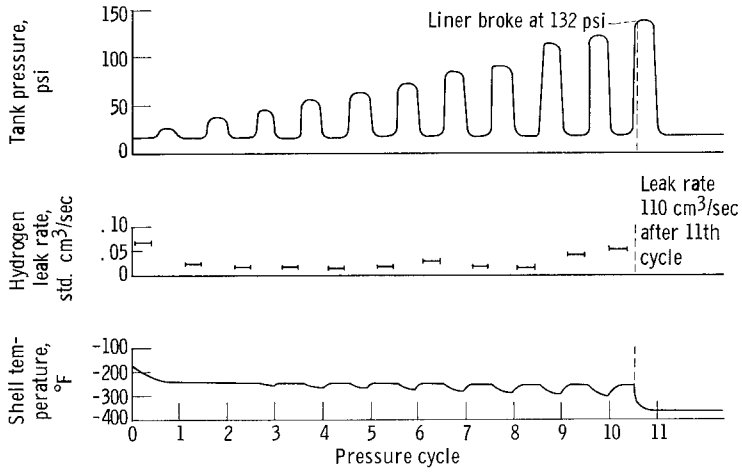

Figure 11. - Pressure cycling liner 5 (Mylar laminate) with liquid hydrogen in tank.

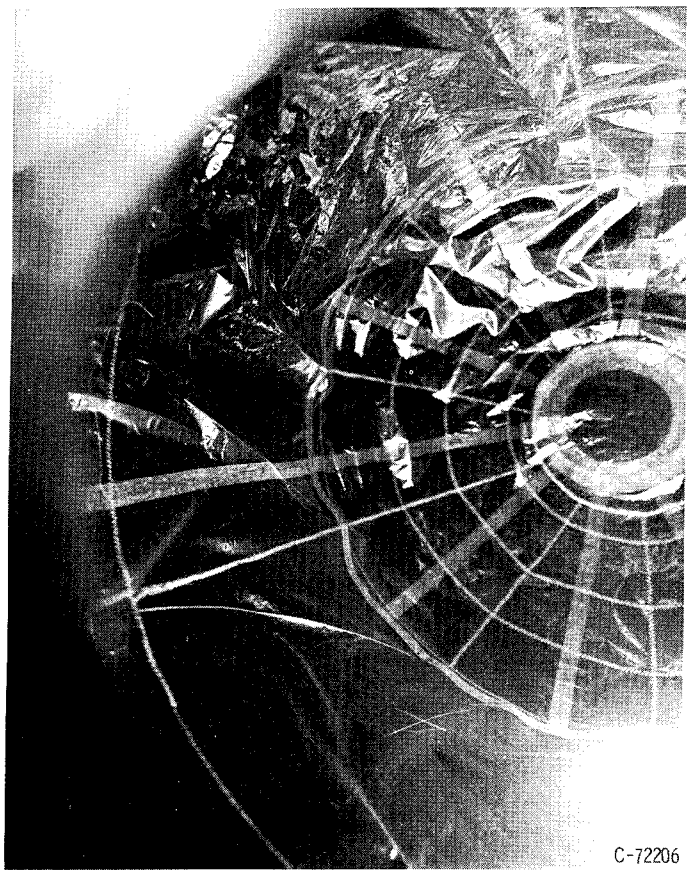

Figure 12. - Liner 5 (Mylar laminate) after failure. Photograph taken with liner in place.

to the liner. On the eleventh cycle, when the pressure reached 132 pounds per square inch, the leak rate suddenly increased. After the pressure was dropped back to 1 atmosphere the leak rate measured 110 standard cubic centimeters per second indicating the liner broke. Also at the time the liner failed, the shell temperature suddenly dropped (fig. 11). The felt pad lost its insulating quality due to the loss of vacuum.

Liner 5 (Mylar laminate) analysis of failure. - Figure 12 is a photograph of the liner after testing, taken through the neck fitting of the tank. As expected, there is some wrinkling. There are several very sharp folds or creases. To further investigate, the liner was removed from the fiber-glass shell.

The leak source was found to be three rather large holes. Two of the holes were located in the upper dome (figs. 13 and 14), and one in the cylindrical portion (fig. 15). Also, after a thorough examination, no visible leaks were found in either the adhesive joints or on the sharp folds or creases just mentioned. The holes shown in figures 13 to 15, were believed to be biaxial tensile failures.

To support this belief, an analysis was made to find at what tank pressure the liner would theoretically fail in tension.

A criterion for liner integrity for a tank of balanced design has been given as:

$$\epsilon(P) < (1 - \nu)\epsilon_{ult} - (S_L - S_S) + \beta \tag{2}$$

Although the fiber-glass shell used in this test was not of balanced design, it was close

Figure 13. - Leak in liner 5 (Mylar laminate) in upper dome.

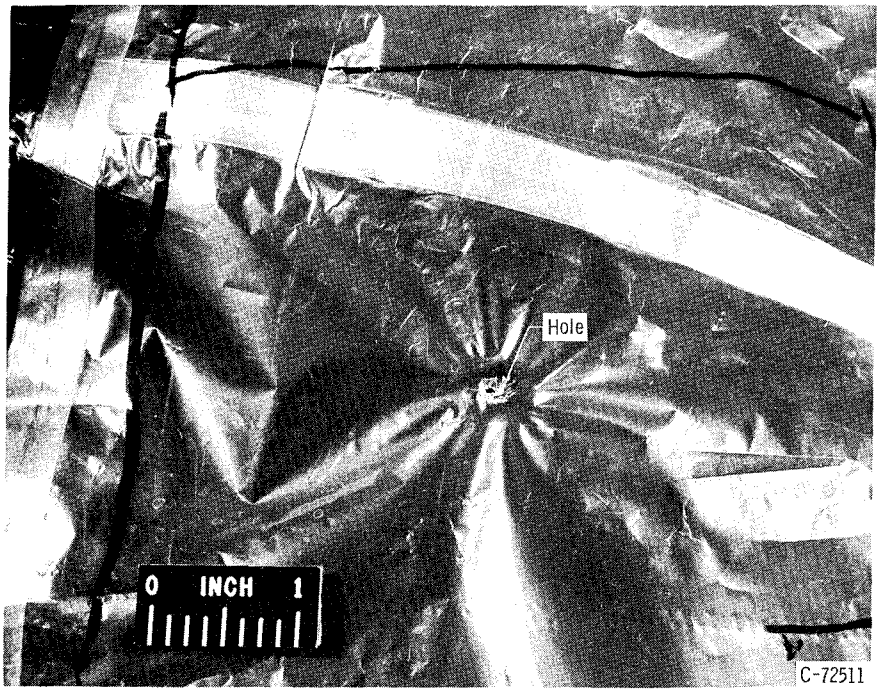

Figure 14. - Leak in liner 5 (Mylar laminate) in upper dome.

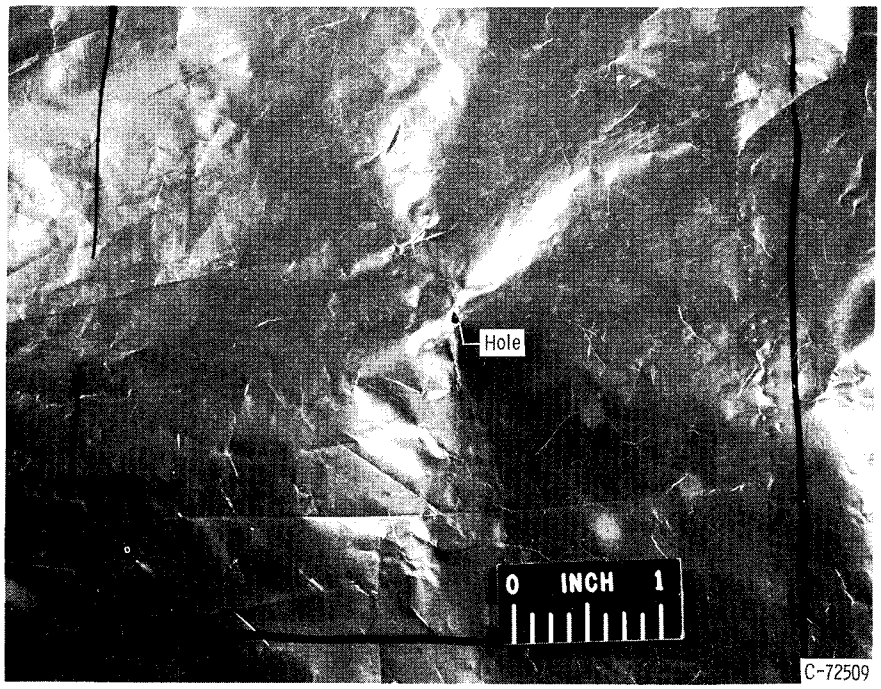

Figure 15. - Leak in liner 5 (Mylar laminate) in cylindrical portion.

enough to being balanced (see fig. 3, p. 8) that the preceding relation can be used in place of equations (A12) and (A13) (criterion for liner integrity for a shell of unbalanced design derived in the appendix). This simplification will, in this case, introduce a possible error of less than 10 percent which is well within the accuracy of the property data used. The values used in this inequality are as follows:

(1) $\epsilon(P) = 5.0\times10^{-5}$ P in./in. at -270° F, where $\epsilon(P)$ was taken as the average of $\epsilon(P)_{\theta}$ and $\epsilon(P)_{Z}$ which were calculated by the method outlined in reference 3 by using the following values:

(a) Strand density of the circumferential wrap, 799 strands/in.

(b) Strand density of the longitudinal wrap, 392 strands/in.

(c) Winding angle of the longitudinal wrap, 11.5°

(d) Winding angle of the circumferential wrap, 90°

(e) E_g (modulus of elasticity of glass fiber), 11.1×10^{6} psi at -270° F, which was interpolated from property data from ref. 3

(2) ν (Poisson's ratio for the liner material), 0.25 (ref. 9), an analytical value for an ideal isotropic material

(3) ϵ_{ult} (the ultimate tensile strain of Mylar), 0.82×10^{-2} in./in. at -423° F (ref. 6)

(4) S_L (thermal contraction of the liner from 70° to -423° F), 3.86×10^{-3} in./in. (ref. 6)

(5) S_S (thermal contraction of the shell from 70° to -270° F), 1.6×10^{-3} in./in. (interpolated from ref. 3 data)

(6) β (fraction oversized); normally with a liner fabricated to larger dimensions than the inside of the shell, β is a constant; with this tank β depends on the internal pressure since the 1/16-in. felt compresses:

$$\beta = 0.6\times10^{-2} \quad \text{at} \quad P = 0$$

$$\beta = 0.31\times10^{-2} - 0.90\times10^{-5}\ P \qquad 50 < P < 200 \text{ psi}$$

The quantity β here was taken as an average of β_{θ} and β_{Z}.

Substitution of these quantities into the criterion for liner integrity (inequality (2)) yields

$$P < 118 \text{ psi}$$

Therefore, theoretically the liner should fail in tension at about 118 pounds per square inch. This is in good agreement considering the accuracy of the preceding data with the 132 pounds per square inch at which the liner actually failed, supporting the belief that holes shown in figures 13 to 15 are the results of a biaxial tensile failure. The

reason the appearance of figures 13 to 15 is not typical of conventional biaxial tensile failures such as the bursting of a pressure vessel, is that with the rupturing of the liner there was no sudden release of energy since the tensile load due to pressure was carried by the filament-wound shell.

Had liner 5 not been about 0.2-percent oversized (due to the compressed felt at 118 psi), a similar calculation but with $\beta = 0$ predicts a failure at 78 pounds per square inch. Therefore making the liner only 0.2-percent oversize will increase the tank pressure at which the liner will fail in tension from about 78 to 118 pounds per square inch.

A calculation of the value of β necessary for the liner to remain intact to the ultimate strain of the fiber-glass shell (assumed to be 3 percent), yields a value near 2.6×10^{-2} inch per inch. This 2.6-percent oversize of the liner would imply extensive wrinkling. In figure 12, β was about 0.6×10^{-2} inch per inch due to the thickness of the 1/16-inch-thick uncompressed felt. Although liner 5 wrinkled successfully with about 0.6-percent oversize it is unknown whether a Mylar liner can wrinkle without leaking with 2.6-percent oversize.

CONCLUDING REMARKS

Although the results of this study are not sufficient to design a reliable leak-proof liner for a flight-weight filament-wound fiber-glass liquid-hydrogen tank, the following generalization can be drawn from it:

1. The concept of the floating liner proved to be feasible.
2. A thin felt pad or spacer inserted in the tank between the shell and liner protected the liner.
3. Successful, leak-proof adhesive joints can be made in a Mylar liner to be used at -423° F.
4. A laminated Mylar-Mylar liner can wrinkle somewhat at -423° F without cracking or leaking.
5. An analytical technique predicted the tank pressure at which a laminated Mylar liner failed in tension within the accuracy of the data used.

Lewis Research Center,
National Aeronautics and Space Administration,
Cleveland, Ohio, September 21, 1965.

APPENDIX - CRITERION FOR LINER INTEGRITY

Upon tank pressurization, a liner will eventually fail in tension, providing the shell does not rupture first. A criterion, then, for liner integrity is of the form

$$\text{net liner strain} < \text{ultimate liner strain} \tag{A1}$$

First consider the ultimate liner strain. It is desirable to be able to relate this to uniaxial tensile test data (the liner is strained biaxially). This can be done as follows: From the general expression for Hooke's law for a planer stress system (ref. 10, p. 52) it is known that:

$$\sigma_\theta = \frac{E}{1 - \nu^2}(\epsilon_\theta + \epsilon_Z) \tag{A2}$$

$$\sigma_Z = \frac{E}{1 - \nu^2}(\epsilon_Z + \nu\epsilon_\theta) \tag{A3}$$

where subscripts θ, Z refer to two orthogonal directions in the plane of the liner, see figure 16.

Now, one of the various available theories of failure must be used. Here the maximum principal stress or Rankine theory (refs. 10 and 11), which is the simplest yet fairly accurate for brittle materials in tension only (ref. 11), is assumed. If Hooke's law is assumed to hold to the ultimate (valid for many materials, especially plastics, at -423° F) the maximum principal stress theory says:

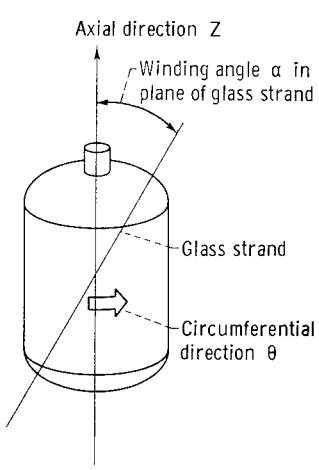

Figure 16. - Definition of coordinates and winding angle.

$$\sigma_{\theta,\,max} = \sigma_{ult} \quad \text{if} \quad \sigma_\theta > \sigma_Z \tag{A4}$$

$$\sigma_{Z,\,max} = \sigma_{ult} \quad \text{if} \quad \sigma_Z > \sigma_\theta \tag{A5}$$

where σ_{ult} is the ultimate stress of the liner material obtained from uniaxial tensile tests. The strains ϵ_θ or ϵ_Z will be a maximum ($\epsilon_{\theta,\,max}$ or $\epsilon_{Z,\,max}$) when the stress σ_θ or σ_Z is the ultimate stress σ_{ult}, so that equations (A2) and (A3) become, using equations (A4) and (A5):

$$\sigma_{ult} = \frac{E}{1 - \nu^2}(\epsilon_{\theta,\,max} + \nu\epsilon_Z) \qquad \text{if} \quad \epsilon_\theta > \epsilon_Z \tag{A6}$$

or

$$\sigma_{ult} = \frac{E}{1 - \nu^2}(\epsilon_{Z,\,max} + \nu\epsilon_\theta) \qquad \text{if } \epsilon_Z > \epsilon_\theta \tag{A7}$$

Since $\sigma_{ult} = E\epsilon_{ult}$ (assuming Hooke's law holds to the ultimate), equations (A6) and (A7) written in a more convenient form become a criterion for liner integrity:

$$\epsilon_\theta < \epsilon_{\theta,\,max} = (1 - \nu^2)\epsilon_{ult} - \nu\epsilon_Z \tag{A8}$$

$$\epsilon_Z < \epsilon_{Z,\,max} = (1 - \nu^2)\epsilon_{ult} - \nu\epsilon_\theta \tag{A9}$$

These are two separate conditions, both of which must be satisfied.

Now consider the net liner strains $(\epsilon_Z, \epsilon_\theta)$. These can be expressed in the following way:

$$\epsilon_\theta = \epsilon(P)_\theta + \epsilon_\theta^T - \beta_\theta \tag{A10}$$

$$\epsilon_Z = \epsilon(P)_Z + \epsilon_Z^T - \beta_Z \tag{A11}$$

where ϵ^T is effective thermal strain of the liner due to a difference of thermal contraction between the liner and fiber-glass shell, $\epsilon(P)$ is the fiber-glass shell strain due to internal pressure (this function is discussed in ref. 3), and β is the fraction oversized $\frac{X_L - X_S}{X_S}$, where X_L is a particular initial liner dimension and X_S is the corresponding initial inside shell dimension. For example, if $\beta = 0$ the liner is fabricated to fit exactly into the inside of the shell. If $\beta_\theta = 0.1$, the circumference of the liner is built 10-percent oversized.

Now make the assumption that $\epsilon_\theta^T = \epsilon_Z^T = S_L - S_S$, where S_L is the thermal contraction of the liner from room temperature to -423° F (in./in.), and S_S is the thermal contraction of the fiber-glass shell from room temperature to its final steady-state temperature (in./in.).

This is valid for liners of negligible thickness.

The criterion now becomes

$$\epsilon(P)_\theta + \nu\epsilon(P)_Z < (1 - \nu^2)\epsilon_{ult} - (1 + \nu)(S_L - S_S) + \beta_\theta + \nu\beta_Z \tag{A12}$$

$$\epsilon(P)_Z + \nu\epsilon(P)_\theta < (1 - \nu^2)\epsilon_{ult} - (1 + \nu)(S_L - S_S) + \beta_Z + \nu\beta_\theta \tag{A13}$$

Notice that all the quantities on the right side of the inequality signs are physical and mechanical properties of the liner and fiber-glass shell. The functions on the left side (discussed in ref. 3) depend on tank pressure. After substitution of the proper numbers, equations (A12) and (A13) reduce to the form:

$$P < K_\theta$$

$$P < K_Z$$

The smaller value of K is the pressure (and direction) at which the liner will theoretically fail in tension.

For the special case where the shell is of balanced design (upon pressurization, all filament strains are the same), $\epsilon(P)_Z = \epsilon(P)_\theta$. Also if $\beta_\theta = \beta_Z$, then inequalities (A12) and (A13) reduce to the same expression:

$$\epsilon(P) < (1 - \nu)\epsilon_{ult} - (S_L - S_S) + \beta \tag{A14}$$

Inequality (A14) appears as equations (1) and (2) in the section Liner Design Considerations.

REFERENCES

1. Rosato, D. V.; and Grove, C. S., Jr.: Filament Winding. John Wiley & Sons, Inc., 1964.
2. Heidelberg, Laurence J.: Evaluation of a Subscale Internally Insulated Fiber-Glass Propellant Tank for Liquid Hydrogen. NASA TN D-3068, 1965.
3. Frischmuth, Robert W., Jr.; and Hacker, Paul T.: Investigation of Bonded Plastic Tape for Lining Filament-Wound Fiber-Glass Cryogenic Propellant Tanks. NASA TN D-3206, 1966.
4. Frischmuth, Robert W., Jr.: Experimental Investigation of Glass Flake as a Liner for Fiber-Glass Cryogenic Propellant Tanks. NASA TM X-1193, 1966.
5. Hanson, Morgan P.; Richards, Hadley T.; and Hickel, Robert O.: Preliminary Investigation of Filament-Wound Glass-Reinforced Plastics and Liners for Cryogenic Pressure Vessels. NASA TN D-2741, 1965.
6. Toth, J. R., Jr.; and Barber, J. R.: Structural Properties of Glass-Fiber Filament-Wound Cryogenic Pressure Vessels. Paper Presented at Cryogenic Eng. Conf., Univ. Penn., Aug. 18-21, 1964.
7. Darms, F. J.; Molho, R.; and Chester, B. E.: Improved Filament-Wound Construction for Cylindrical Pressure Vessels. Rept. No. ML-TDR-64-43, Vol. I, Aerojet-General Corp., Mar. 1964.
8. Hacker, Paul T.; DeVos, Francis J.; and Stutesman, Harley L.: Evaluation of Adhesives for Sealing Metallic and Plastic Films for Use at Liquid-Hydrogen Temperatures. NASA TM X-1057, 1965.
9. Frocht, Max M.: Strength of Materials. Ronald Press Co., 1951.
10. Timoshenko, S.: Strength of Materials. D. Van Nostrand Co., Inc., 1940.
11. Seely, F. B.; and Smith, J. O.: Advanced Mechanics of Materials. Second ed., John Wiley & Sons, Inc., 1952.
12. McClintock, Michael R.; and Gibbons, Hugh P.: Mechanical Properties of Structural Materials at Low Temperatures. Monograph No. 13, NBS, June 1, 1960.
13. Durham, T. F.; McClintock, R. M.; and Reed, R. P.: Cryogenic Materials Data Handbook. NBS, 1961.
14. Scott, R. B.: Cryogenic Engineering. D. Van Nostrand Co., Inc., 1959.

"The aeronautical and space activities of the United States shall be conducted so as to contribute . . . to the expansion of human knowledge of phenomena in the atmosphere and space. The Administration shall provide for the widest practicable and appropriate dissemination of information concerning its activities and the results thereof."

—NATIONAL AERONAUTICS AND SPACE ACT OF 1958

NASA SCIENTIFIC AND TECHNICAL PUBLICATIONS

TECHNICAL REPORTS: Scientific and technical information considered important, complete, and a lasting contribution to existing knowledge.

TECHNICAL NOTES: Information less broad in scope but nevertheless of importance as a contribution to existing knowledge.

TECHNICAL MEMORANDUMS: Information receiving limited distribution because of preliminary data, security classification, or other reasons.

CONTRACTOR REPORTS: Technical information generated in connection with a NASA contract or grant and released under NASA auspices.

TECHNICAL TRANSLATIONS: Information published in a foreign language considered to merit NASA distribution in English.

TECHNICAL REPRINTS: Information derived from NASA activities and initially published in the form of journal articles.

SPECIAL PUBLICATIONS: Information derived from or of value to NASA activities but not necessarily reporting the results of individual NASA-programmed scientific efforts. Publications include conference proceedings, monographs, data compilations, handbooks, sourcebooks, and special bibliographies.

Details on the availability of these publications may be obtained from:

SCIENTIFIC AND TECHNICAL INFORMATION DIVISION

NATIONAL AERONAUTICS AND SPACE ADMINISTRATION

Washington, D.C. 20546